HIGH TEMPERATURE CAPACITIVE SENSORS ALSC - SC18M-HT/SC30M-HT

GENERAL DETAILS

The high temperature sensors should be considered as part of the traditional range of sensors with the difference that electronic portion is completly separate from the sensing part which is in the form of an extension and can withstand tempeature up to 250°C.
These products are used to control the levels of hot materials such as liquids, oil, powder and plastic granules.
They also sense solid metallic and non-metallic bodies positioned in areas of high temperature.
The connecting cable between the sensor and the amplifier must be of standard length (2M or 5M). It is not capacitive, it resists to temperatures from -200 to +250°C it is connected to the sensor and it is provided with a screened connector for connection to the amplifier.
The amplifier is supplied in two different types, model ALSC-1CH which is suitable for one sensor and model ALSC-2CH which is suitable for two sensors, the model ALSC-1CH can be supplied with delayed sensing.
The sensors can be supplied in the following formats M18x1 and M30x1.5 made of stainless steel and PTFE.

AMPLIFIERS TECHNICAL CHARACTERISTICS

TYPES		ALSC - 1CH	ALSC - 2CH
Sensors	N°	1	2
A.c. power supply	V	24 or 110/220 50-60 Hz	
Absorption	VA	3	
Operation indicator		Yellow led x 1	Yellow led x 2
Temperature range	°C	-20 ÷ +60	
Output relay - changeover		1 relay - 5 A at 220 Vac	2 relay - 5 A at 220 Vac
Housing		Plastic	
IP rating	IP	40	
Sensitivity adjustment		Incorporated	Incorporated x 2 sensors

TECHNICAL CHARACTERISTICS SENSOR SC18M-HT / SC30M-HT

- Housing and fixing nuts in stainless steel AISI 303.
- Sensible part in PTFE.
- Cable length 2 m or 5 m.
- Plug connector for wiring to the amplifiers.
- Min./max. temperature range: -200 ÷ +250°C.
- Switching distance (Sn) type SC18M-HT: 5 mm.
- Switching distance (Sn) type SC30M-HT: 15 mm.
- IP rating: IP68.

WIRING DIAGRAMS

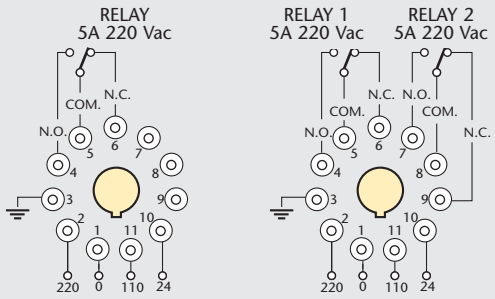

INSTALLATION INSTRUCTIONS

If the material to be controlled is in a metallic container check that it is earthed and connect terminal 3 of the amplifier to the earth.
If the container is not metallic, connect terminal 3 of the amplifier and the body of the sensor SC... M-HT to the earth by using the relative terminal.
The connection wire between the sensor and the amplifier must be separated from the power supply.

DIMENSIONS (mm)

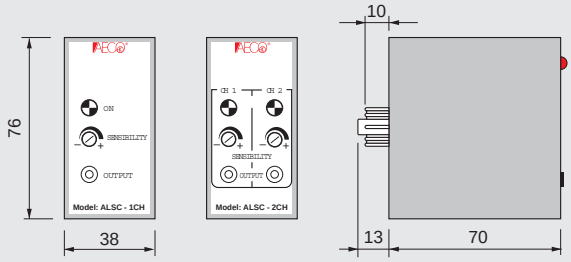

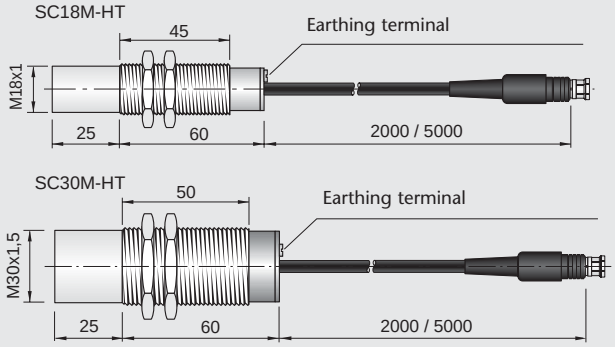

N.B.: For a correct fixing of the amplifiers it is recommended to use socket type B11 e and fixing spring type MF (Page 102).